PROJECT REFERENCE NO.	SHEET NO.
36049.93	2
R/W SHEET NO.	

NORTH CAROLINA PROFESSIONAL SEAL 26930 ENGINEER GREG S. DAVIS

DocuSigned by: Greg S. Davis 33D47B5FD78F4A8...

9/8/2015

DIVISION DESIGN / CONSTRUCT ENGINEER

TYPICAL SECTION NO. 1

–L– STA. 14+00 TO 15+00

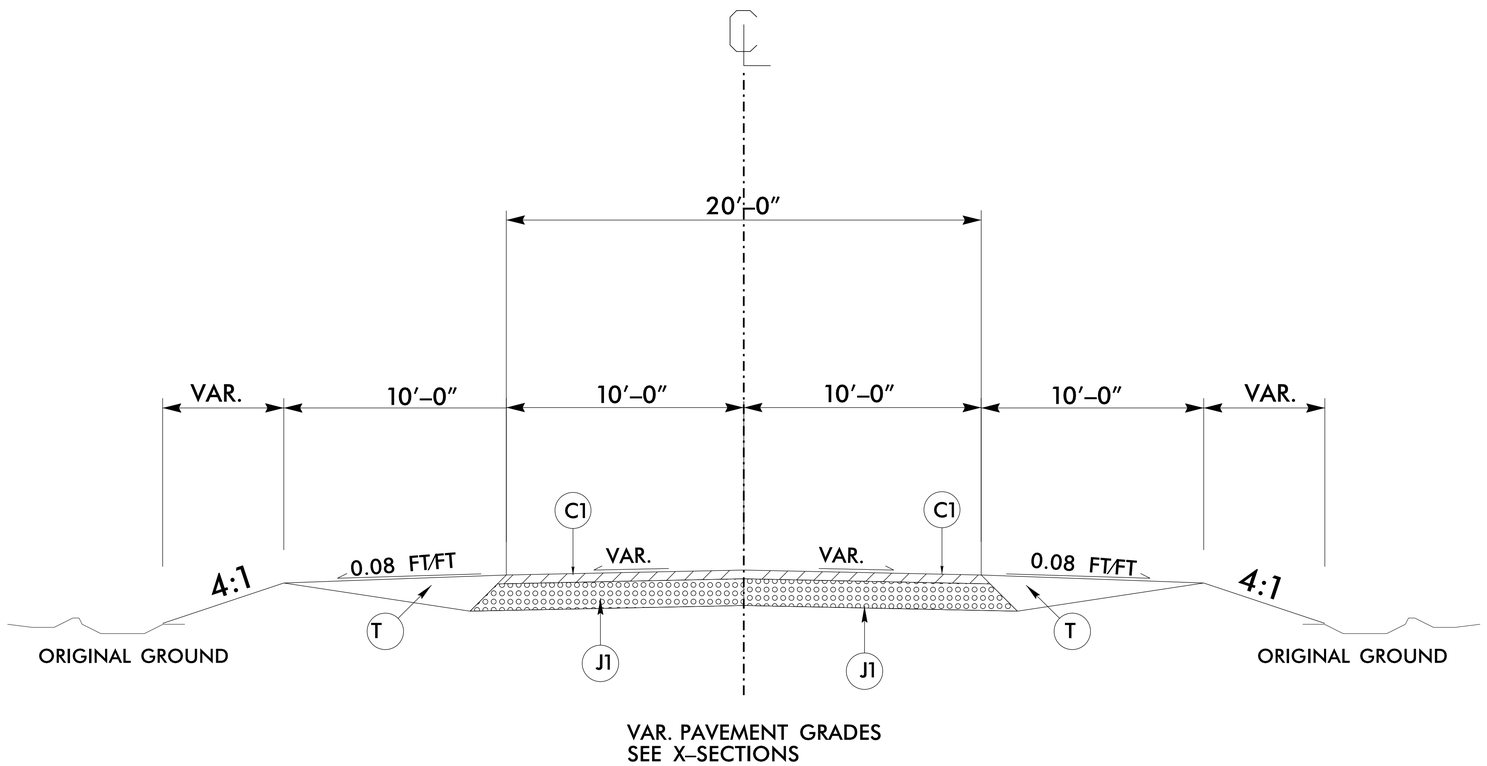

PAVEMENT SCHEDULE	
C2	PROP. 2″ ASPHALT CONCRETE SURFACE COURSE, TYPE SF9.5A, AT AN AVERAGE RATE OF 220 LBS. PER SQ. YD.
J1	PROP. 8″ AGGREGATE BASE COURSE
T	EARTH MATERIAL

NOTE: PAVEMENT EDGE SLOPES ARE 1:1 UNLESS SHOWN OTHERWISE.

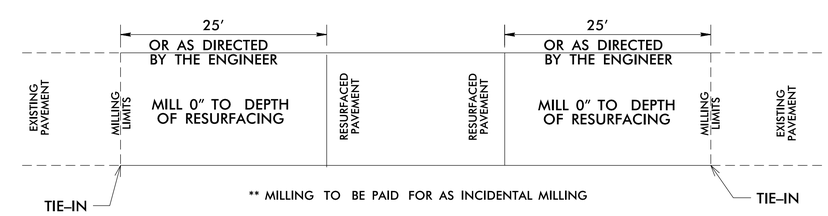

PAVEMENT TIE–IN DETAIL

USE THIS DETAIL FOR –L– STA. 13+75 TO –L– STA.14+00 TO AND –L– STA. 15+00 TO –L– STA. 15+25

REVISIONS

8/17/99

08-SEP-2015 16:45
r:\roadway\proj\36049_US64_pipe\psh\typ\Jordan_Lake_typ.dgn
psaylors
AT 08CAD 270410